JHAIBLE DUAL WASP VCF (Euro)

Jürgen Haible's WASP Filter adaption of the famous CMOS VCF introduced some unique features, in particular a distortion stage. The R*S version takes this a step further by turning it into a dual version with a dynamic link that allows to combine the filters in series or parallel or anything in between - even voltage controlled. Also, each side can blend from lowpass to highpass or bandpass (yes, the notch is in there, too!) creating infinite filterbank combinations. A Sync switch has been added to be able to control both side's cutoff frequency with from the left side. The unique distortion can be configured to PRE or POST for each side.

The R*S kit is the only authorised adaption of the Haible WASP VCF for Eurorack.

Features

- **2 Identical Haible WASP filters including distortion.**
- **Blend from Lowpass to Highpass or Bandpass.**
- **Distortion can be configured to be PRE or POST.**
- **MODE blends from serial to parallel setup - even CV controlled.**
- **SYNC: control Cutoff of both filters at the same time.**
- **Infinite options from 4-pole VCF to Stereo filter.**
- **Massive drone machineComplex oscillator when patched to self-oscillate.**
- **No wiring needed.**

Filter sections

- Audio input with level pot
- CV inputs for Cutoff with attenuators
- Resonance knob
- Type knob: blend output between LOWPASS and HIGHPASS or LOWPASS and BAND-PASS (set Type destination with the Type-Switch)
- Distortion knob (Distortion can be configured to PRE filter or POST filter using jumpers)

Control section (Center)

- SYNC switch: when activated, Cutoff and CV from the left side control the right side, too. This opens up amazing possibilites: use both sides separately (turn MODE to parallel) as a stereo filter or set MODE to serial for a 4-pole (24db) WASP filter.
- MODE knob: blend from SERIAL to PARALLEL.
- MODE CV input: MODE can be voltage controlled(!)
- MODE CV knob: attenuverter to control how the CV affects the MODE
- CENTER OUTPUT: mix output sending out the combination of the filters (and distortion) depending on MODE setting

DUAL HAIBLE WASP SIGNAL FLOW

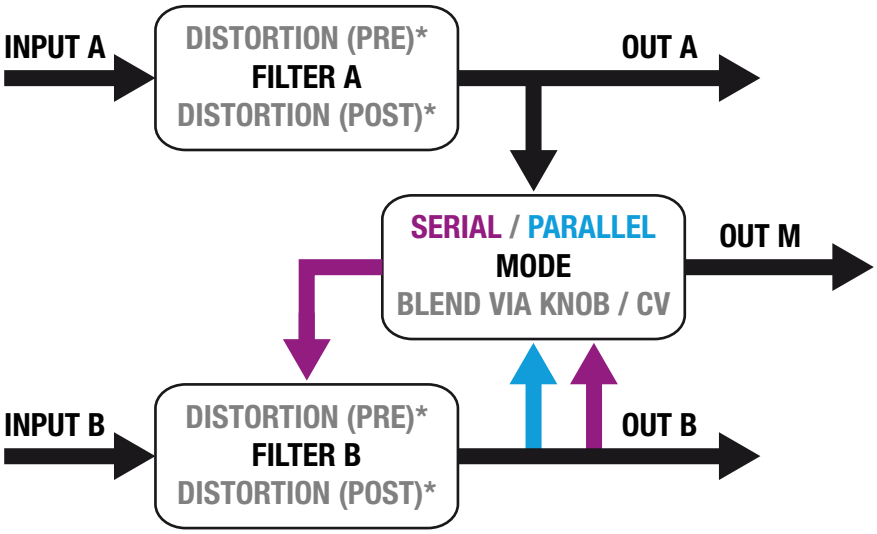

*DISTORTION TO BE SET TO PRE OR POST FOR EACH SIDE VIA JUMPER

The R*S kit consists of a main pcb and a matching panel pcb which serves as an interface to the front panel. Bot pcbs version 1.00 are through-hole (TH) with only very few optional SMT parts (BCM857 on the main pcb and dual op-amp on the panel pcb):

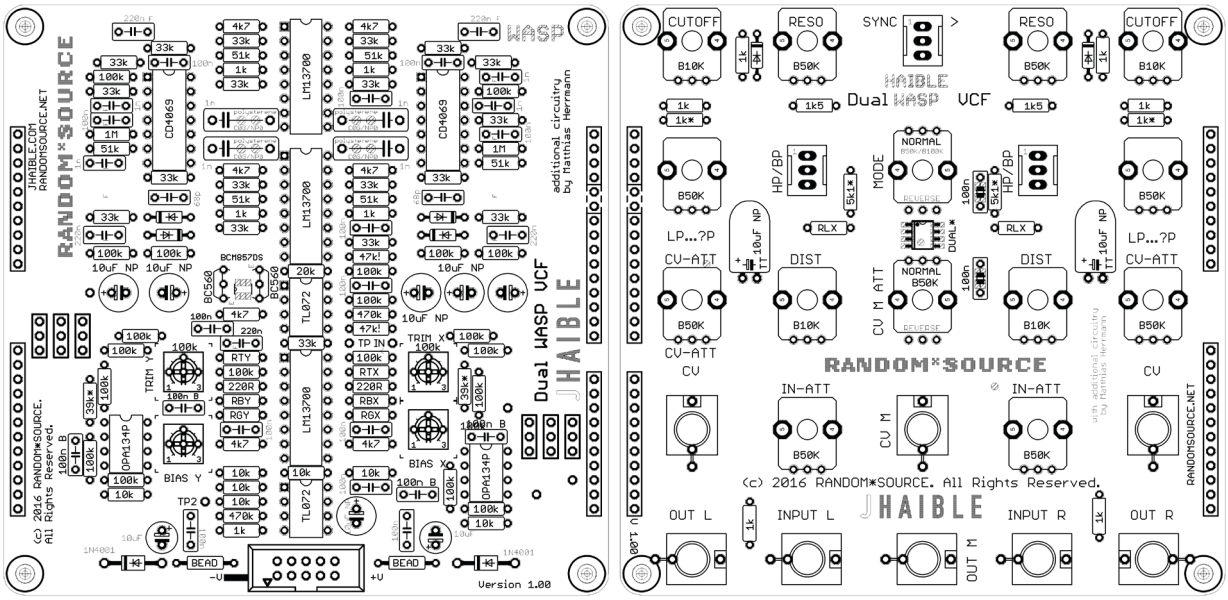

Please note:

- **You have to decide for each filter if the distortion should be before the filter (PRE) or after (POST) by setting 3 jumpers for each side on the main pcb: all three in the UP position = PRE, all three DOWN = POST:**

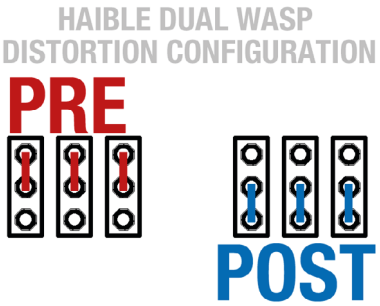

(Do not try anything in between!)

- **If you don't use a BCM857, pay attention to the direction of the transistors Q1 and Q2 (emitters are marked "E" on the pcb) - incorrect orientation can damage the bottom LM13700 (IC5, close to the power connector). If you accidentally used an incorrect trasistor (pair), you probably have to replace the LM13700 for the middle section to work after you fixed the transistors.**

- There are 2 pairs of (optional) trimmers to optimize the MODE performance:
  "TRIM X" and "TRIM Y" control CV Rejection. These can be calibrated by ear (or scope). See details below.
  "BIAS" trimmers can be used to eliminate output offset, for this you need a good scope (a good DMM might work, too). This is really for the perfectionists - see calibration info below -, so if you don't have a scope, it's probably best not to bother: install RGX, RGY and a link from pin 1 to 2 (center) or 3.

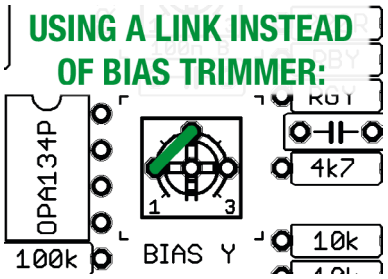

- Be careful: 2 of the op-amps (left and right) are SINGLE! The ones in the center row are DUAL.
  Do not confuse SINGLE and DUAL op-amps up or they will burn!
- There's a dual op-amp (in SMT) on the panel pcb: without this, turning the CV attenuator (without CV going in) will affect the Cutoff frequency. Install the op-amp to avoid this (but omit the resistors marked RLX!)
- Recommenden: use OPA2134 (instead of TL072) for all dual op-amps and OPA134 for the single ones.
- The Dual WASP has to be powered by a +/-12V stabilized PSU only.
- Random*Source has aquired all rights to Jürgen Haible's electronic heritage and is the only legitimate source for Jürgen Haible's designs.

Bill of Materials

Trimmers

2	100k	CV_REJECT1, CV_REJECT2	Trimpots (Bourns 3362P or Vishay T73YP...) or anything that fits - Singe turn should do Optional - trimmers to adjust CV rejection for the MODE circuitry, RTX and RTY are needed if installing trimmers!
2	100k	BIAS1, BIAS2	Trimpots (Bourns 3362P or Vishay T73YP...) Optional - use trimmer and lower RGX, RGY or use link and keep RGX, RGY - see text!

Resistors (1%)

2	BEAD	F1, F2	Ferrit Bead
2	RLX	R12, R13	Install links / 0R (only) if NOT using IC10!
2	220R	R57, R62	
11	1k	R25, AR1, AR2, R5, R9, R25B, R26A, R26B, R32, R36, R77	
2	1k*	AR3, AR4	Taper for Cutoff Pot
2	1k5	R24B, R24	
7	4k7	R19, R20, R46, R47, R59, R64, R69	
2	5k1*	R27, R27B	sets CV range
7	10k	R75, AD7, AD14, R72, R73, R74, R76	
1	20k	R70	
19	33k	R2, R23, R29, R71, R1, R4, R6, R8, R10, R11, R18, R28, R31, R33, R35, R37, R38, R45, R50	
2	39k*	RDA, RDB	sets level of distorted signal
4	47k	RBX, RBY, RCP1, RCP2	
6	51k	R3, R7, R16, R30, R34, R43	
20	100k	AD1, AD2, AD3, AD5, AD6, AD8, AD9, AD10, AD12, AD13, R17, R21, R22, R44, R48, R49, R58, R63, R67, R68	
2	390k / 470k	RGX, RGY	BIAS - use 390k + 100k BIAS trimmer or 470k and link trimmer
2	470k	R66, R78	
4	1M	R15, R42, RTX, RTY	RTX, RTY: Optional - needed for CV rejection trimmers

Capacitors (5mm lead spacing except for Styroflex)

2	68p	C4, C13	C0G/NPO
4	1n	C7, C8, C16, C17	C0G/NPO

4	1n	C2, C3, C11, C12	Styroflex (or C0G/NPO)
19	100n	C5, C6, C14, C15, CP3, CP4, CP5, CP6, CP7, CP8, CP9, CP10, CP11, CP12, CP13, CP14, CP15, CP16, CP17	Bypass Caps - Film recommended, X7R is OK
2	10n or 100n	C27, C28	Bypass caps on panel pcb - SMT or TH
5	220n	C1, C9, C10, C18, C19	Film 5% (e.g. WIMA) or C0G
2	10uF	CP1, CP2	Electrolytic
8	10uF NP	C20, C21, C22, C23, C24, C25, C26, CSMOOTH	Nichicon Muse NP Mouser: 647-UES1V100MEM NON-POLAR / BIPOLAR!

ICs

2	OPA134P	IC8, IC9	Burr-Brown SINGLE Op-Amp (or OPA227)
2	TL072	IC6, IC7	or OPA2134 (DUAL)
2	CD4069U	IC3, IC4	CMOS
3	LM13700	IC1, IC2, IC5	
6	1N4148	D1, D2, D3, D4, D5, D6	
2	1N4001	D7, D8	Protection against inserting power ribbon the wrong way
1	DUAL*	IC10	*** SMT Dual Op-amp, eg OPA2134, TL072 (SOIC8)
2	BC560	Q1, Q2	PNP Transistor BC560C - Alternative to BCM857!! Do not install both!
1	BCM857DS	Q1A	NXP BCM857 (SMT) instead of Q1, Q2

Potentiometers (Alpha 9mm vertical pcb mount) — available from Thonk, Tayda

4	B10K	CUTOFF1, CUTOFF2, DIST1, DIST2	Linear Potentiometer
9	B50K or B100K	INPUT ATTENUATORS, CV ATTENUATORS, RESONANCE, TYPE, MODE	Linear Potentiometer
1	B50K	PMODE-CV	B100K should work here, too, but will slightly change the pot sensitivity around the center

Misc

6	Knobs		matching pots, e.g. Davies from Thonk
3	Switch SPDT 2-Positions	(ON - ON)	Sub-Miniature Switch, e.g. Mountain Switch (Mouser: 108-0042-EVX)
8	Thonkiconn Jacks		3.5mm Jack Sockets (PJ301M-12) from Thonk
1	Euro Power header		MTA-100 power connector, Reichelt: WSL 10G
	SIL headers 2x 10 pin 1x 12 pin 1x 15 pin (10 + 5)		pin connectors, linking main pcb to component pcb - using precision strips allows to break off pieces as needed.

Power Connector

The module is designed to be powered using a standard Eurorack 10-pin DIP header (pinout +12V / GND / GND / GND / -12V with the **red stripe on the cable indicating the -12V side**).

Builing choices

Trimmers: Trimming concerns only the MODE (mix) circuitry and does not seem essential. CV rejection (TRIM X and TRIM Y) can easily done by ear (see calibration info below), while the BIAS trimming requires a good scope, so installing the BIAS trimmers makes no sense unless you're sure that you want to do the calibration (which is easy with a scope).

Op-amps: the OPA2134 and OPA134 are hard to beat in performance, however, feel free to experiment with other choices, just make sure you don't mix up single and dual.

Building

1. Use a side-cutter to separate main pcb and component pcb.

2. Main pcb and component pcb are to be connected through precision SIP sockets and pins (pin headers). It is recommended to use the pins on the main pcb (facing down, soldered from above) and the pin sockets on the component pcb (standing up, soldered from the front panel side). Break or cut off the pieces you need and stick them together.

3. Attach screws / spacers (10mm or hight matching the pin headers to connect) to the panel pcb (this gets more difficult once the component pcb is connected to the front panel) and insert the pin headers connecting the pcbs. Main pcb and panel pcb should form a nice sandwich (don't solder yet). Check that you didn't leave out any pins / holes and that the sockets are all on the same side (component pcb). Solder all the pins in while keeping the sandwich together - this avoids any misalignments.

4. **Carefully** separate the sandwich - if you used precision sockets, this may not to too easy - they stick together nicely (giving a good connection).

5. Mount the Thonkiconn jacks, the pots and the switches onto the panel pcb. Pots should sit on the side facing the front panel (as marked on the board). Don't solder them in yet.

6. Either solder the SMT op-amp (OPA2134 or TL072 in SOIC8) onto the panel pcb **or** install links / zero ohm (0R) resistors in the spots marked RLX - not both!

7. Insert and solder the BP (Audio) Caps (C10, C11) and the LED trimmers (or resistors - not both!) onto the panel pcb. The BP caps should lie (flat) between the Thonkiconn jacks.

8. Carefully mount the panel pcb (with the pots etc. inserted) onto the front panel. You may then have to wiggle each pot a bit to get the pots through. Make sure the threads of the pots go through completely and the pots sit right at the front panel. Screw the jacks, pots and switches to the the front panel to make sure of that.

9. Once everything is nicely in place, solder the pots, jacks und switch onto the component pcb (while the front panel is attached).

10. Build the main board with all through-hole-parts required, beginning with the resistors, caps etc.

11. Connect a power cord supplying +12V, GND, GND, -12V to the power-header on the main board and double check the direction of the power header before you turn power on. You should be ready to go now :-)

Calibration

CV Rejection: If you installed TRIM X and TRIM Y, simply feed a audio signal - ideally a pulse wave around 1kHz or so - into the CV Mode input, set the MODE knob to CCW (minimum) and turn the CV Mode knob all the way up (make sure there is no other input anywhere). Listen to the MODE center output and adjust TRIM X, then TRIM Y so that you get no (or hardly any) output - of course you can use a scope, too. (Don't expect it to get absolutely flat / quiet, especially with a pulse wave.)

BIAS: If you've installed the two BIAS trimmers, you need no input at all. Use the scope to check the voltage a the test pad marked TP next to TRIM X. Ideally it should be at 0 mV. Use BIAS X to set it accordingly. Then repeat with test pad TP2 below the BIAS Y trimmer and you're done.

Some Troubleshooting Tips

- **First make sure both sides work correctly, i.e. ignore the middle section completely, feed a signal into each side and listen to OUT A / OUT B.** If only one side does not work: compare both sides, they are identical, so a build issue is likely on the side not working. If both sides do not work, it seems to be a systematic problem, check power, values, op-amp orientations etc.
- **Only deal with the middle section if both sides are OK!** Some quick tests for the middle:
  - Check that you used a BCM8**5**7 (not BCM8**4**7!)? Or, if you used single transistors for Q1 and Q2, that you used the right ones / inserted them correctly? Note the "**E**" marking (emitter) on the pcb.
  - Feed an audio signal into INPUT A (only), set both filters to LOWPASS and open filter A and B (CUTOFF) and listen to OUT (middle). Any signal present? Turn the mode knob (try both ends) - does the signal change? Play with CUTOFF A, does that affect the output / do you hear a filtered sound?
  - No sound in the middle? Keep feeding a signal into A, CUTOFF open and check with a scope using the **test pads**: "**(x) TP IN (y)**" - on (y) you see the signal going into the VCA, on (x) the output of the first VCA. If you have a signal on IN (y) but not on (x), swap the lower LM13700 (near the power connector).
  - Test pad 2 ("**TP2**") can be used to check the signal coming out of the second VCA (= second half of the LM13700). However, if you have no signal on test pad (x), there cannot be any on TP2, so x and y are usually more relevant for spotting any problem with the LM13700.
- **You can also measure the voltages on pins 1 and 16 of the lower LM13700 while slowly turning the mode knob** - these are the VCA control pins. When turning the mode knob you should see it moving somewhere near the negative rail, approx. just between -10,5V and -11V (but it should move). If these pins don't move (but sit on the negative rail):
  - When you move the MODE knob, the voltage at the 3rd pin from the bottom of the long (top) pin row on the right of the main pcb (connecting the panel pcb and the main pcb) - next to the „L" of the JHAIBLE logo - should change. if it does not, there could be an issue with the pot or the connection.
  - If all of that looks OK, the OTA (LM13700 near the power connector) could be dead.

Power Consumption

Power consumption: up to 130mA @ +12V and ca. 40mA @ -12V
Module width: 22HP, depth: < 35 mm

(Version 2. July 2017, 4:20 PM)