SERGE Resonant Equalizer (EQ)

The RESONANT EQUALIZER (EQ) is a unique ten-band filter designed specifically for electronic sound synthesis and processing. Except for the top and bottom frequency bands, the bands are spaced at an interval of a major seventh. The Resonant Equalizer is designed to produce formant peaks and valleys similar to those in acoustic insstruments.

There are three equalized outputs: the two COMB outputs provide the sums of the two alternate filter bands, while the two top outputs are the (identical) mix of all filter bands. Please note that there is no sharp separation between the bands, moving any frequency knob will have an influence on both COMB outputs.

COMB1 provides the outputs of the (left) frequency bands at 29 Hz, 115 Hz, 411 Hz, 1.5 kHz and 5.2 kHz while COMB2 mixes the bands at 61 Hz, 218 Hz, 777 Hz, 2.8 kHz, and 11 kHz. This equalizer differs from other equalizers in that the bands can be set to be resonant. When the knobs are in the middle position, the response at the main EQ Output is flat. When the knobs are positioned between the 9 and 3 o'clock position, up to 12 db of boost or cut is set at the band. If the knob is set beyond the 3 o'clock position, the band will become resonant, simulating the natural resonance of acoustic instrument formant structures. Below the 9 o'clock position, increased band rejection is achieved.

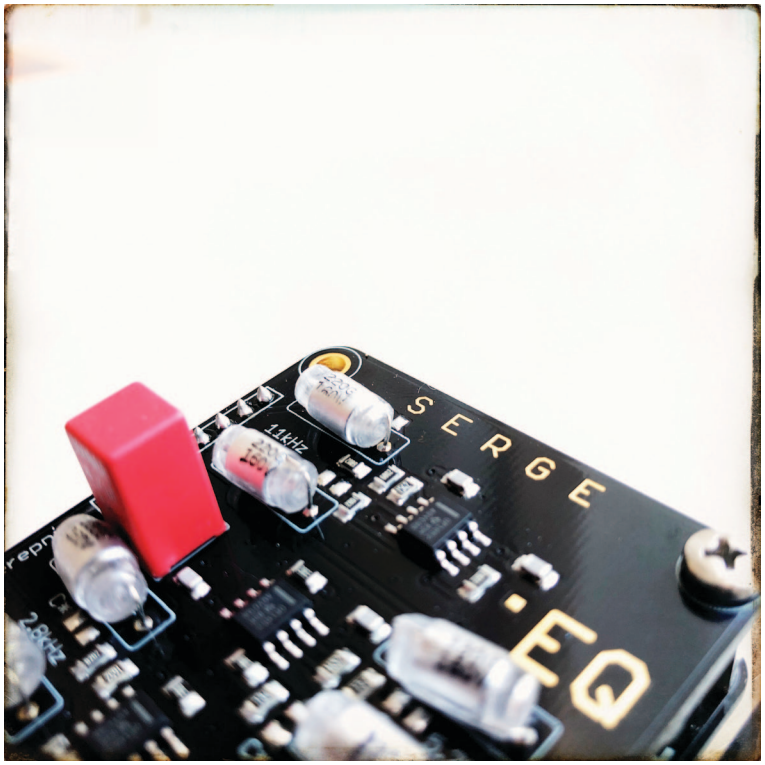

The Random*Source version of the filter is a licensed and authorized adaption of the legendary Serge equalizer. It adds a Feedback section (knob and phase switch) which allows to feed back the output signal or the inverted output signal (depending on the Phase switch). Adding inverted feedback leads to phase cancellation effects - unlike the "normal" feedback, level decreases and the signal thins out.

The Random*Source version uses precisions components selected for optimum audio performance.

Things you should know

Anything from beautiful color to crazy feedback

- FEEDBACK Switch: UP means positive feedback, causing most noticeable results depending on the individual band settings and the Feedback knob. DOWN means negative feedback - turning the FEEDBACK knob up causes phase cancellation, signal gets thinner and more quiet. MIDDLE position means no feedback (FEEDBACK knob is ignored).
- The settings of each band affect the overall output and the COMB UP / DOWN outputs, i.e. the bands interact.
- The ResEQ - especially the FEEDBACK knob can be used for massive distortion and overdrive, however, you can also get vey soft and harmonic results by going easy on the band settings and/or the FEEDBACK.
- Output level can get quite hot (up to +/- 12V) when using feedback (this is feedback!), and of course clip internally, creating beautiful overdrive. However, that signal level can also cause heavy clipping (or when using exernal gear, possibly damage) in whatever you send this signal to - especially AD converters or mixers may need attenuating the input signal or setting the input levels accordingly to avoid ugly (digital) clipping or worse.
- The ResEQ is a magical and unpredictable machine - try feeding it anything (e.g. very slow pulses or Spikes or Noise) and play around.
- The sound is affected by the component choices, especially the capacitors and op-amps. Depending on these, you get a different instrument (e.g. when using Film caps or Mica instead of Styroflex).

Patch-Ideas

- To get a general idea, use an overtone-rich signal (Pulse wave or Saw) as input, turn Feedback off and play around with the individual bands.
- Check out the COMB UP / DOWN outputs - these can be used to create pseudo-stereo from a mono signal.
- Play with the Feedback knob and switch to experience the drastic side of the EQ. Beware that depending on the desired frequency and effect (e.g. Kickdrum or processing of a snare or hihat) you may need different settings of positive feedback (lower frequencies may call for more, higher ones for less).
- Try the ResEQ without any input signal, only feedback, as an oscillator, crazy sound generator.
- Try patching COMB UP or COMB DOWN back to the input (even when sending another signal in).

DIY - Building your EQ

The Serge Resonant EQ kit consists of a main pcb and a matching panel pcb:

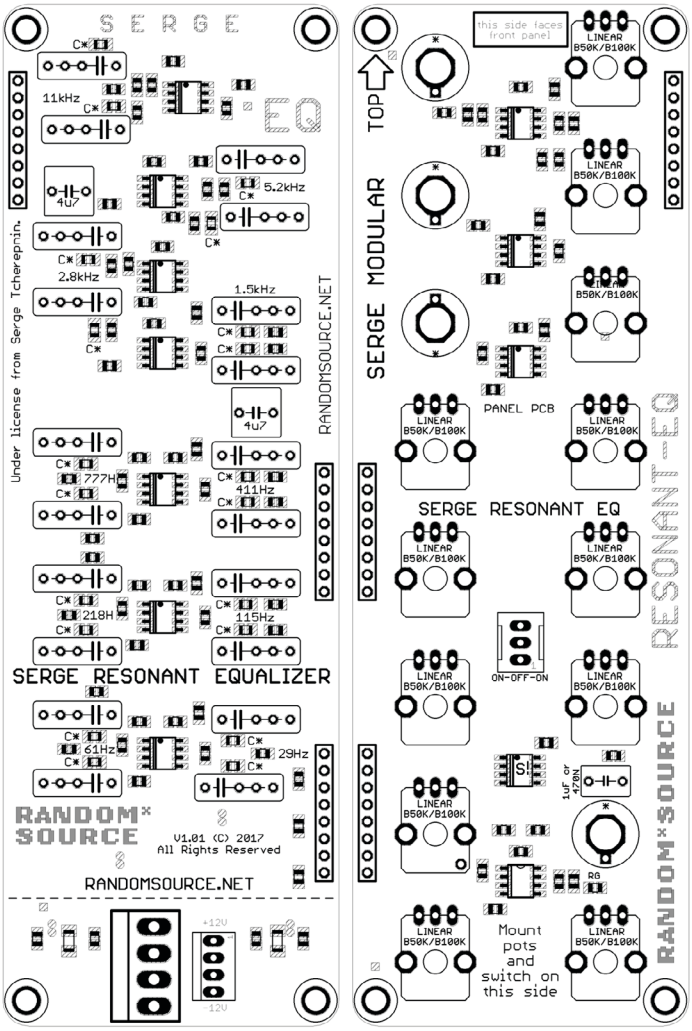

Please note:

The pcbs contain all resistors and op-amps (as well as some capacitors) in SMT. Audio capacitors for the frequency bands are can be either SMT (**marked "C*"** on the pcb) or through-hole and are mostly not installed (**only 29 Hz and 61 Hz in C0G**, as 22N and 47N may be hard to find as Styrene). For the other caps you cannot go wrong with Styrene/ Styroflex (ideally with low tolerances, e.g. "G" = 2%) - however, you may also experiment with different cap choices (PET or WIMA FKP).

- Check every band if there is already a pair of SMT caps installed ("C*") before installing TH caps.
- **Install either through-hole (e.g. Sytroflex) or SMT caps (C*) for a band - not both**.
- **PCB V 1.1 contains a cosmetic error: both the 3rd potentiometer and the COMB DOWN are slightly offset**, however, the front panel can still be used without a problem: simply cut off the 2 "arms" of the pot that usually "grab" the pcb so that the pot can sit as required by the front panel (the 3 legs are long enough to be solderd normally).
- Use antistatic precaution - try to avoid touching the SMT parts.
- Board is designed to be powered by a +/-12V stabilized PSU only. (+/-15V is untested).

Bill of Materials

Capacitors (min. 35V, 5mm lead spacing except Styroflex)

Please check for each band if the two SMT caps marked "C*" are not already installed before installing a though-hole cap!

4	220p	11kHz, 5.2kHz	Styrene/Styroflex*
2	680p	2.8kHz	Styrene/Styroflex*
2	1N	1.5kHz	Styrene/Styroflex*
2	2N2	777Hz	Styrene/Styroflex*
4	4N7	411Hz, 218Hz	Styrene/Styroflex*
2	10N	115Hz	Styrene/Styroflex*
2	22N	61Hz	Styrene/Styroflex or C0G, Film **
2	47N	29Hz	Styrene/Styroflex or C0G, Film **
1	470N oder 1uF		Film (e.g. WIMA)
2	4.7uF		Film (e.g. WIMA)

* or Film / C0G or SMT ...

** only if not already installed in SMT!

Misc

1	Switch SPDT	Phase (for Feedback)	Sub-Miniature Switch, sets the Phase of the feedback added with the knob, e.g. Mountain Switch. 2 positions (ON - NONE - ON, Mouser: 108-0042-EVX) means you have to turn the knob down for no feedback, 3 positions (ON - OFF - ON, Mouser: 108-0044-EVX) means center positions turns feedback off.
1	Power header		MTA-156 power connector, Mouser: 571-6404454
3	SIL header 8pol		pin connectors, linking main pcb to component pcb - using precision strips allows to break off pieces as needed
3	Banana Jacks BLACK		Emerson-Johnson Thonk / Mouser: 530-108-0903-1 (black)
10	Potentionmeter 50k or 100k	linear (B50K or B100K) for the 10 frequency bands	Alpha 9mm vertical pcb mount available from Thonk, Tayda
2	Potentionmeter 50k or 100k	logarithmic (A50K or A100K) or linear for IN, FEEDBACK	Alpha 9mm vertical pcb mount available from Thonk, Tayda

Building

This is simply a suggestion - you might find a different workflow more practical:

1. Mount the banana jacks onto the front panel.

2. Use a side-cutter to separate main pcb and component pcb.

3. Install the power header and caps on the main pcb and the Film cap on the panel pcb.

4. Main pcb and component pcb are to be connected through precision DIP socket and pins. Add the spacers to the panel pcb and install the pin (SIL) headers so that the 2 pcbs form a nice sandwich. Pay attention to the direction the pcbs are facing - the SMT parts have to be outside the sandwich.
   It is recommended to have the female headers on the panel pcb and the pins on the main pcb.

5. If you have double-checked that the positioning is correct, solder the pins connecting the 2 pcbs.

6. Carefully seperate the 2 pcbs again and mount the pots onto the panel pcb. Pots should sit on the side facing the front panel (as marked on the board). Don‘t solder them in yet.

7. Insert pots onto the panel pcb. V101: pot footprint on the pcb is slightly offset - cut off the 2 arms (left and right) of the 2.8K band (3rd pot from the top) so that the pot can slide to the correct position in respect of the front panel. Insert the Switch.

8. Carefully mount the panel pcb (with the pots etc. inserted) onto the front panel. You may then have to wiggle each pot a bit to get the pots through. V1.01: COMB DOWN jack may need a little bending / force to go through the hole. Make sure the threads of the pots go through completely and the pots sit right at the front panel. Screw pots and the switch to the panel to make sure of that.

9. Once everything is nicely in place, solder the pots (while the front panel is attached). Make sure you don‘t spill any solder on the SMT parts.

10. Solder the banana jacks in. You can either solder them directly to the surrounding vias (ring round) or - which makes removing easier should you ever need to do that - by inserting a stiff (bare) wire into the little hole (via) and solder that wire to the top of the banana jack:

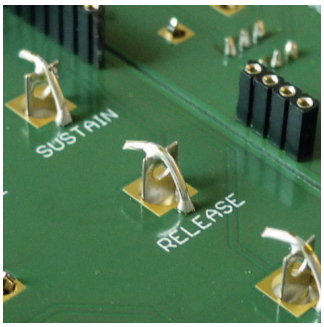

11. Mount the main pcb again and fasten it using the spacers. V1.01: only 3 screws will fit, but that is absolutely sufficient to hold the pcb.

12. Connect a power cord supplying +12V, GND, GND, -12V to the power-header on the main board and double check the direction of the power header before you turn power on.

13. You should be ready to go :-)

Calibration

No calibration required.

Power Consumption

Power consumption: up to appr. 100mA @ +12V and 100mA @ -12V

(Last change: 3. February 2019, 4:09 PM)