SERGE Slopes (DTG) 2“ DSG mk2

Slopes is a 2” wide version of the Dual Universal Slope Generator mk2 that is designed to cover both oscillator / audio as well as clock generator and envelope duties.

All Random*Source Serge modules are brought to you under license and in cooperation with Serge Tcherepnin.

The power of the DSG mk2

This 2” version of the Dual Universal Slopes Generator features a cycle switch and an 1V/Octave input for the left side for easy use as an oscillator (that tracks over a bass range of up to 4 octaves or more). Best tracking is achieved with the Rise set to max and Fall controlling the pitch. The right side is essentially identical except for those extras.

Outputs are the normal (unipolar / DC) output (white) and a gate output underneath the pulse width of which depends on the ratio of the rise and fall of the normal output.

Patch the red (GATE) out into TRIG IN on either side for cycle mode - of course the left side can also achieve this with the switch. Both rise and fall can be manually set to create anything from a sawtooth wave to triangle to a reverse sawtooth (or anything in between). By using the lower switch, a control voltage can be set to affect RISE, FALL or BOTH slopes. Both sides feature (black) audio INs for filtering effects etc.

The 4U pcb kit consists of a panel pcb serving as an interface to the front panel as well as a main pcb which already contains most of the parts in surface-mount technology (SMT).

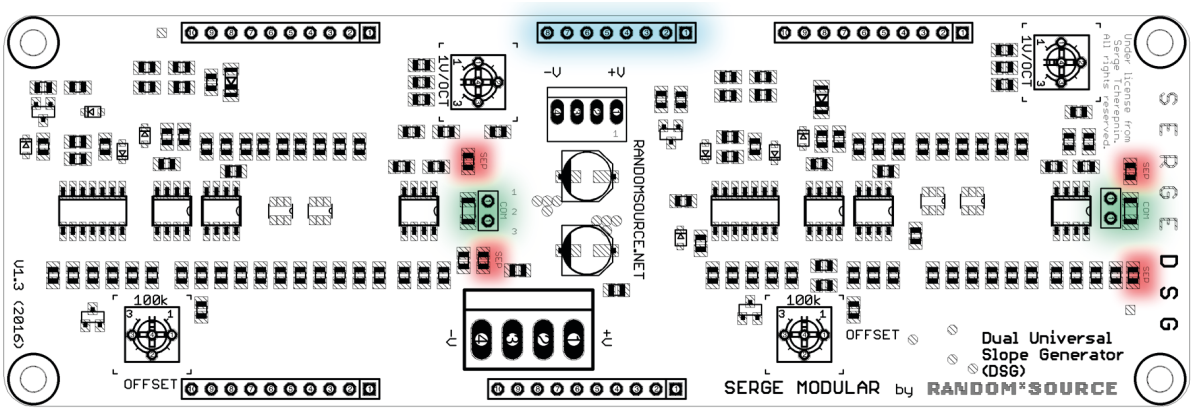

Please note:

- The main DSG pcb is the same as used for other incarnations of the DSG mk2 - whether the DSG pcb is a “contemporary version” or a “classic” version does not matter. However, **both sides have to be set (adjusted) for common CV control**:
- There **must be a link or zero-ohm resistor** at the 2 spots marked “**COM**”; and
- The 4 spots marked “**SEP**” **have to be empty** (remove any zero-ohm resistors).
- **Connect only the pins within the white rectangular boxes** marked on the panel pcb. **Ignore the ones marked blue in the picture above**.
- **Use antistatic precaution** when handling the pcb - don’t touch the small SMD parts and ICs with your hands.
- Only these parts have to be soldered in: trimpots, pin stripes to connect the main pcb to the component pcb, MTA power header - the second (smaller) power header is for convenience, you can use it to power another module next to the DSG.
- LED: To set / control LED brightness, install either trimpots (“LED”) or resistors (e.g. 2k) on the component pcb - do not install both! **Use low current LED**s - at least 100-130mcd or ultrabright LEDs (60°) plus a **trimpot of (only) 2k or (or a 2k resistor) for (fairly) bright LEDs (**100-150mcd). If you use ultra-bright LEDs, a 5k or higher trimmer might be needed.
- The component pcb contains some potentiometer footprints that allow you to chose the direction in which the potentiometer works. Use the “NORMAL” orientation (as marked on the pcb) unless you have a good reason not to.

Bill of Materials

Trimmers

2	100k	DSG: Offset	Trimpot (Bourns 3362P, Vishay T73YP104KT20 or similar) DSG: to adjust the uni-polar output to a range of 0V to 5V
2	5k	DSG: 1V/Oct	Trimpot (Bourns 3362P, Vishay T73YP502KT20 or anything that matches the footprint) to adjust the tracking of the 1V/Oct input. Single turn is sufficient.
2	2K or more	DSG: LED brightness (instead of RLED resistors) - on panel pcb -	Trimpot (Bourns 3362P or Vishay T73YP202KT20 or anything that matches the footprint) to adjust the LED brightness. Pick value depending on LED (see text). Optional - use trimpot or LED resistors (not both!)

Resistors

(4)	(2k*)	RLED*	Pick according to LEDs and desired brightness only if not using trimmers for LED brightness!

Headers / pin connectors - DSG side

-	SIL header 8pol	OMIT - NOT NEEDED!	(8-pin connector, links main pcb to component pcb)
4	SIL header 10pol		10-pin connector, links main pcb to component pcb

Misc

1	MTA-156		MTA-156 power connector
8	Banana Jacks RED	DSG: TRIG IN, GATE OUT,	Emerson-Johnson Mouser: 530-108-0902-1 (red) or Thonk
2	Banana Jacks BLACK	2x IN,	Emerson-Johnson Thonk / Mouser: 530-108-0903-1 (black)
5	Banana Jacks WHITE	CV / unipolar	Emerson-Johnson Thonk / Mouser: 530-108-0901-1 (white)
2	LED 5mm	low current	pick color to suit LED lens
2	LED lens 5mm		VCC, Mouser 593-3000R (red), 593-3000A (amber) ...
4	Potentionmeter 50k	SSG: linear (B50K)	Alpha 9mm vertical pcb mount available from Thonk, Tayda
6	Potentionmeter 50k or 100k	linear (B50K or B100K)	Alpha 9mm vertical pcb mount available from Thonk, Tayda
1	SPDT Switch SUB (2 positions)	ON - ON CYCLE	SUB-Miniature - Mountain-Switch Mouser: 108-0042-EVX
2	SPDT Switch (3 positions)	ON - OFF - ON DSG: RISE / BOTH / FALL	SUB-Miniature - Mountain-Switch Mouser: 108-0044-EVX
6	Davies knobs		1900H - Thonk

DSG mk2 Configuration

The DSG mk2 might be pre-configured to be used in a (full) DSG with separate control over Rise and Fall. This is perfect for use in a 3" wide DSG, however, **to use the pcb in a 2" version, you (may) have to change this setting:**

SEParate control of Rise / Fall: two 0R resistors (SEP) act as links / jumpers and COM is open.
COMmon CV control: no SEP resistors installed and COM is linked with a 0R resistor (or jumpered).

For Slopes (and all incarnations that have RISE / FALL / BOTH switches on both sides of the module) **both sides of the pcb have to be set to COMmon:**

1. **Remove the two 0R (zero ohm) resistors** at the two spots marked **SEP** (left and right of COM) - you can use one of them in the next step. (To remove an SMT resistor, use a fairly big blob of solder on the tip of your iron to heat both sides of the resistor at the same time and push is out quickly.)

2. **Set a jumper at COM** or solder in a 0R resistor onto the pads underneath the COM rectangle.

Building

This is simply a suggestion - you might find a different workflow more practical:

1. Mount the Banana jacks, the LED lens and the switches onto the front panel. If you use retention rings for the LED lenses, attach the ring to the lens. (**Do not mix up the switches!**)

2. Screw (10mm) spacers to the panel pcb if desired - this is easiest done while the panel pcb is not yet attached to the front panel.

3. Main pcb and panel pcb are to be connected through precision DIP socket and pins. It is recommended to use the pins on the main pcb (facing down, soldered from above) and the pin sockets on the panel pcb (standing up, soldered from the front panel side). Break or cut off the pieces you need and stick them together so that main pcb and component pcb form a nice sandwich (don't solder yet). Check that you didn't leave out any pins / holes and that the sockets are all on the same side (panel pcb). Also make sure the pcbs have the right orientation (so that the pots will sit outside!). Solder all the pins in while keeping the sandwich together - this avoids any misalignments.

4. Carefully separate the sandwich - if you used precision sockets, this may not to too easy - they stick together nicely (giving a good connection).

5. Solder the LED trimpots or resistors onto the panel pcb. Solder short pieces of (stiff) wire - about 10mm long - into the pads for the switches. These should stick up in the air on the sidefacing the main pcbs and should only go through the pcb as much as required to solder them in (i.e. should not stick out much on the other side).

6. Mount the pots onto the component pcb. Pots should sit on the side marked on the pcb - this side faces the front panel. Don‘t solder them in yet. Stick the LEDs into the component pcb - the long leg must be at the + side.

7. Carefully mount component pcb (with the pots and LEDs inserted) onto the front panel. First slide / push the LEDs into the LED lens - all the way, this may take a bit of force. You may then have to wiggle each pot a bit to get the pots through. Make sure the threads of the pots go through completely and the pots sit right at the front panel. Screw the pots to the panel to make sure of that.

8. Once everything is nicely in place, especially the LEDs sitting inside (and not on top) of the LED lenses, solder the LEDs and the pots onto the component pcb (while the front panel is attached).

9. Solder the switches in by soldering the air-wires onto the correcponding contacts:

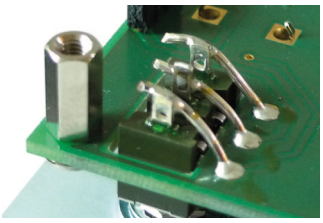

10. Solder the banana jacks in. You can either solder them directly to the surrounding vias (rings around) or - which makes removing easier should you ever need to do that - by inserting a stiff (bare) wire into the little hole (via) and solder that wire to the top of the banana jack:

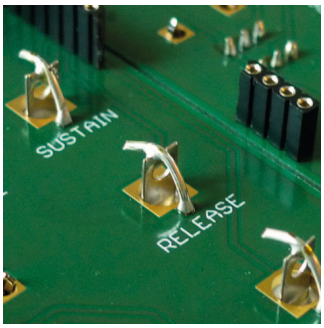

11. Solder the through-hole parts onto the main board.

12. Attach any screws / spacers if desired and mount the main pcb onto the component pcb.

13. Connect a power cord supplying +12V, GND, GND, -12V to the MTA-header on the main board and you should be ready to go :-)

DSG Calibration

LEFT SIDE: Use the CYCLE switch to get the left side (= top half of pcb) to cycle on its own - this way you can directly start calibrating.
RIGHT SIDE: Patch GATE OUT into TRIG IN to start CYCLE mode (acting like an oscillator).
From the original kit instructions:

Turn the RISE and FALL knobs to center position or above. Patch the OUT(put) into an audio mixer or Output Module to monitor the output. There should be a triangle wave present which can be changed to a sawtooth wave of lower frequency by turning down either the RISE or FALL knob. The frequency and timbre will depend upon the settings and the shape as set by the relationship between the Rise and Fall times.
Starting from a middle position, adjust the **OFFSET trimmer** so that the OUTput is in the range of 0V to 5V. The module will most likely stop cycling towards either end of the trimmer - if this happens, move the trimmer a bit back towards the center, unplug the patch cord between GATE OUT and TRIG IN and plug it in again - that should bring the cycle back.

Adjust **LED brightness** according to taste - make sure you don't turn the brightness up too much (i.e. trimmer setting shoud be at least 1k unless you use white or blue LEDs).

Using the trimpots on the main pcb the **1V/Oct tracking** can be adjusted. However, be aware that by design the tracking of this module will not reach the range covered by dedicated oscillators. To adjust the tracking of the RIGHT side, set the wave to an inverted Sawtooth (negative ramp, Rise is as steep as possible) and calibrate for the lower range (up to 440Hz).

Power Consumption

DSG mk2: ≈ 85mA @ +12V and ≈ 65mA @ -12V

(Version 25. September 2017, 9:36 PM)